SRV532GH3

contemporary

30CM Domino Gas Hob,
St/steel

EAN13: 8017709111229

2 burners

Rear: ultra rapid burner

3.3 kW

Front: 1.0 kW

St/steel base

St/steel knobs

Cast iron pan stand

St/steel burner caps

Automatic electronic ignition

Safety valves

Adaptable for LPG

Options

- **LG53-1** - Connecting strip

Versions

- **SRV532X-3** - St/steel pan stand

SMEG S.p.A.
Via Leonardo da Vinci, 4
42016 Guastalla (RE)
Tel. 0522 821 1

smeg
technology with style

SRV532GH3
contemporary
gas
30 cm
stainless steel
cast iron pan stands

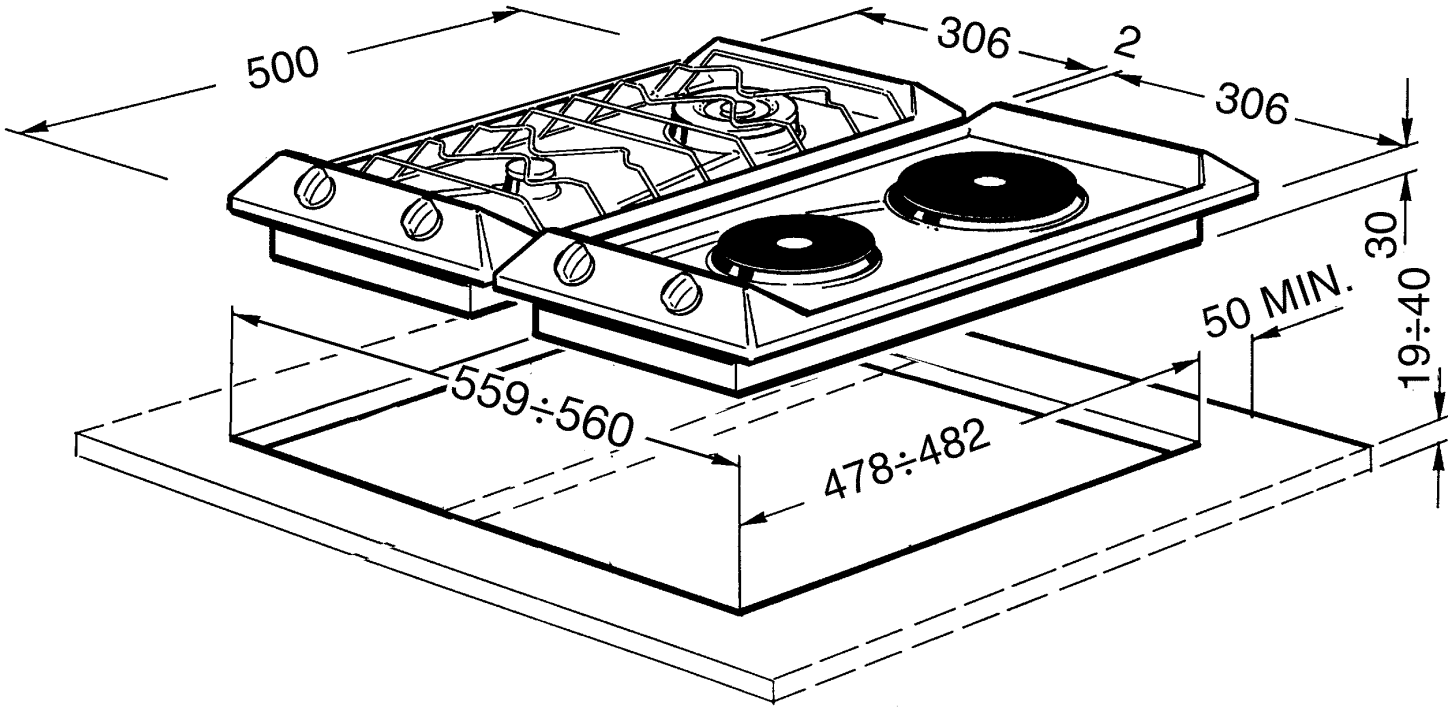

SMEG S.p.A.
Via Leonardo da Vinci, 4
42016 Guastalla (RE)
Tel. 0522 821 1